The matrix cover polynomial

Fan Chung* Ron Graham*

Abstract

The *cover polynomial* $C(D) = C(D; x, y)$ of a digraph D is a two-variable polynomial whose coefficients are determined by the number of vertex coverings of D by directed paths and cycles. Just as for the Tutte polynomial for undirected graphs (cf. [11, 16]), various properties of D can be read off from the values of $C(D; x, y)$. For example, for an n-vertex digraph D, $C(D; 1, 0)$ is the number of Hamiltonian paths in D, $C(D; 0, 1)$ is the permanent of adjacency matrix of D, and $C(D; 0, -1)$ is $(-1)^n$ times the determinant of the adjacency matrix of D. In this paper, we extend these ideas to a much more general setting, namely, to matrices with elements taken from an arbitrary commutative ring with identity. In particular, we establish a reciprocity theorem for this generalization, as well as establishing a symmetric function version of the new polynomial, similar in spirit to Stanley's symmetric function generalization [13] of the chromatic polynomial of a graph, and Tim Chow's symmetric function generalization [5] of the usual cover polynomial. We also show that all of the generalized polynomials and symmetric functions can also be obtained by a *deletion/contraction* process.

Key words: digraph polynomials, Tutte polynomials, deletion/contraction rules.

*University of California, San Diego

1 Overview

In [7], the authors introduced the path-cycle cover polynomial $C(D; x, y)$, a polynomial generated from the ways that the vertices of a digraph D can be covered by (directed) paths and cycles. This has generated a fair amount of follow-up work during the past two decades by various researchers studying its properties. This includes the *geometric* cover polynomial of D'Antona and Munarini [4], the computational complexity of evaluating $C(D; x, y)$ at specific points in the (x, y)-plane [1, 2, 3], symmetric function generalizations of $C(D; x, y)$ [5], etc. All of this work applied to ordinary (unweighted) digraphs. In this paper, we extend our earlier work by defining a new cover polynomial $C_t(D; x, y)$ which generalizes our earlier polynomial in several significant ways. First, D can be taken to any *weighted* digraph D in which each edge e is assigned an arbitrary weight $w(e) \in R$, where R is some arbitrary commutative ring with identity. Furthermore, each vertex v of D can be equipped with an arbitrary positive integer weight $w_0(v)$. Finally, the subscript t can be any real number. The case of $t = 1$ is our original cover polynomial, while the case of $t = 0$ is the geometric cover polynomial. We also introduce a symmetric function generalization $\Xi_t(D; \mathbf{x}, \mathbf{y})$ for our "doubly-weighted" digraphs D, analogous to Chow's symmetric function generalization $\Xi(D; \mathbf{x}, \mathbf{y})$ of $C(D; x, y)$ (see [5]) and Stanley's symmetric function generalization $X(G)$ of the chromatic polynomial of a graph G (see [13]). In particular, we show that $\Xi_t(D)$ satisfies a surprising reciprocity formula, something that Chow (and also Gessel [10]) observed for $\Xi(D)$. We also show that both $C_t(D)$ and $\Xi_t(D)$ can be defined by a deletion/contraction process.

2 Introduction.

To begin, we first make a few remarks concerning notation. A *digraph* $D = (V, E)$ is given by a set V of vertices and a set E of ordered pairs (u, v) of vertices, called the edges of D. An edge of the form (u, v) with $u \neq v$ is called a *regular* edge. An edge of the form (u, u) is called a *loop*. We assume that D can have multiple edges and loops, i.e., many copies of the pair (u, v) (so, strictly speaking, D is a multi-digraph). By a (directed) *path* P in D, we mean a sequence $P = (v_1, v_2, \ldots, v_r)$ of distinct vertices v_k where each (v_i, v_{i+1}) is an edge of D (with a similar definition for a directed cycle in D).

In general, all undefined graph theory notation can be found in standard texts, such as [8].

We next define two operations on D, each of which produces a somewhat simpler digraph. Given an edge $e = (u, v)$ of D (which can be regular or a loop), the *deleted* digraph $D \setminus e$ is defined as $(V, E \setminus \{e\})$. In other words, the edge e is simply deleted from the edge set of D.

The other operation is the *contraction* of an edge e in D. This produces the digraph $D/e = (V^{'}, E^{'})$ where $V^{'}$ and $E^{'}$ are defined as follows. If $e = (u, v)$ is a regular edge, then the vertices u and v are merged to form the vertex uv. The only edges incident to uv will be those regular edges that are of the form (x, u) or (v, y) in D. They become (x, uv) or (uv, y) in $E^{'}$. In particular, all loops (u, u) and (v, v) are removed, and an edge (v, u) now becomes a loop (uv, uv) in D/e. All other edges in D remain edges in D/e. On the other hand, if $e = (u, u)$ is a loop, then $V^{'} = V \setminus u$ and $E^{'}$ is formed by removing every edge of D which is incident to u.

We next define the *cover* polynomial $C(D) = C(D; x, y)$ of D recursively (where x and y are indeterminates):

(i) If $D = I_n$, the digraph consisting of n independent vertices and no edges, then $C(D) = x^{\underline{n}} = x(x-1)(x-2)\cdots(x-n+1)$, the *falling factorial*. In particular, for the case $n = 0$, the corresponding digraph $D_\emptyset$ has $C(D_\emptyset) = 1$;

(ii) If e is a regular edge then $C(D) = C(D \setminus e) + C(D/e)$;

(iii) if e is a loop then $C(D) = C(D \setminus e) + yC(D/e)$.

It is rather remarkable that $C(D)$ is actually well-defined, in other words, it does not depend on the order that various edges and loops are deleted and contracted. This was one of the results of [7] and followed from the following interpretation of the coefficients of $C(D)$. If we write $C(D) = \sum_{i,j} c_D(i, j) x^{\underline{i}} y^j$, where $x^{\underline{i}}$ denotes the *falling factorial* $x^{\underline{i}} = \prod_{j=0}^{i-1}(x - j)$, then $c_D(i, j)$ is just the number of ways of disjointly covering all the vertices of D with i paths and j cycles, where a single vertex is considered to be a path of length zero, and a loop is considered a cycle of length 1. Thus, for example, $c_D(0, 1)$ is just the number of Hamiltonian cycles of D, so it should come as no surprise that computing $C(D)$ for general digraphs D is

computationally challenging, to say the least (we say more about this later in the paper). We point out that $C(D)$ also satisfies a surprising reciprocity relation (first independently observed by Gessel [10] and Chow [5]): suppose D' denotes the *complement* of D, i.e., the roles of edges and non-edges are interchanged. Then we have:

Theorem [5, 10] For all unweighted digraphs on n vertices:

$$C(D'; x, y) = (-1)^n C(D; -x - y, y) \tag{1}$$

3 Weighted digraphs.

Our first generalization will be to assign *weights* to the edges of D. Thus, to each edge e of D we assign a weight $w(e)$ where $w(e)$ can be taken in general to lie in some fixed commutative ring R with identity (we will ordinarily take R to be $\mathbb{R}$ or $\mathbb{C}$). (Similar generalizations are known for other graph polynomials, e.g., see Section 6.1 of [2]). We can naturally represent the weighted edges of $D = (V, E)$ by a matrix $M = M(D)$ where the rows and columns of M are indexed by V and for each edge $e = (u, v)$, the (u, v) entry of M is given by $M(u, v) = w(e)$. For the case of ordinary (unweighted) digraphs, each edge has weight 1. In Figure 1, we give an example of a weighted digraph and its associated matrix. (The weights may look like integers but they are really from our commutative ring R!)

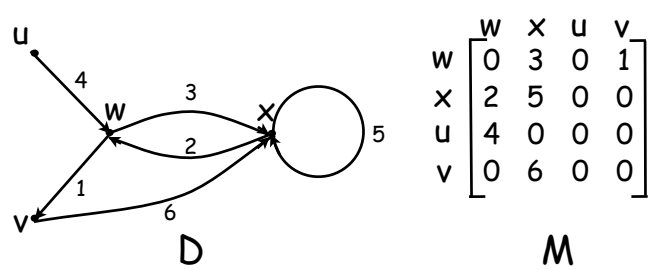

Figure 1: A weighted digraph D and its associated matrix M.

We will now define the cover polynomial $C(M) = C(M; x, y)$ for the matrix M analogously as was done for an unweighted digraph D. We will switch between using a weighted digraph D or its associated matrix M as

is convenient. Again, we will give a recursive definition based on a weighted version of deletion and contraction for matrices. Let M be a matrix and consider an entry $e = M(u, v)$. The *deleted* matrix $M \setminus e$ is formed by just replacing the (u, v) entry of M by 0. The *contraction* M/e of M is formed by first replacing row u of M by row v of M, and then deleting row v and column v of M. Thus, M/e has one fewer row and column than M does. Note that the same rule applies whether e is a diagonal (loop) entry or a non-diagonal (regular edge) of M. We illustrate this process in Figure 2.

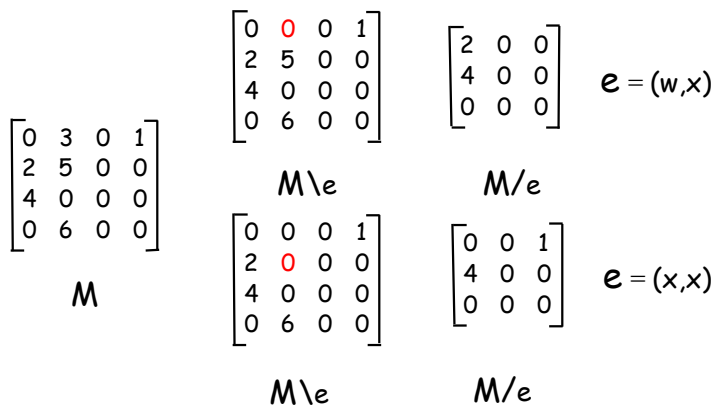

Figure 2: Deletion and contraction for the matrix M

The cover polynomial $C(M) = C(M; x, y)$ is now defined recursively as follows:

Definition 1:

(1a) If $M = M_n(\mathbf{0})$, the n by n matrix of all 0's, then $C(M) = x^{\underline{n}}$, where for the empty matrix $M_0(\mathbf{0})$, we set $C(M_0(\mathbf{0})) = 1$;

(1b) If $e = (u, v)$ with $u \neq v$, then we define $C(M) = C(M \backslash e) + M(u, v)C(M/e)$;

(1c) if $e = (u, u)$ then we define $C(M) = C(M \setminus e) + M(u, u)\ y\ C(M/e)$.

For example, for the matrix shown in Figure 2, we have

$$C(M) = (5x^3 + 16x^2 + 11x)y + x^4 + 10x^3 + 23x^2 - 10x. \tag{2}$$

We can state the above formula in terms of the weighted digraph D as follows:

Definition 2:

(2a) If $D = I_n$ consisting of n vertices and no edges, then $C(D; x, y) = x^{\underline{n}}$ where for $n = 0$ we set $C(D; x, y) = 1$;

(2b) If e is a regular edge, then $C(D) = C(D \setminus e) + w(e)C(D/e)$;

(2c) If e is a loop, then $C(D) = C(D \setminus e) + w(e)\ y\ C(D/e)$.

In Figure 3, we show the corresponding weighted digraph deletions and contractions.

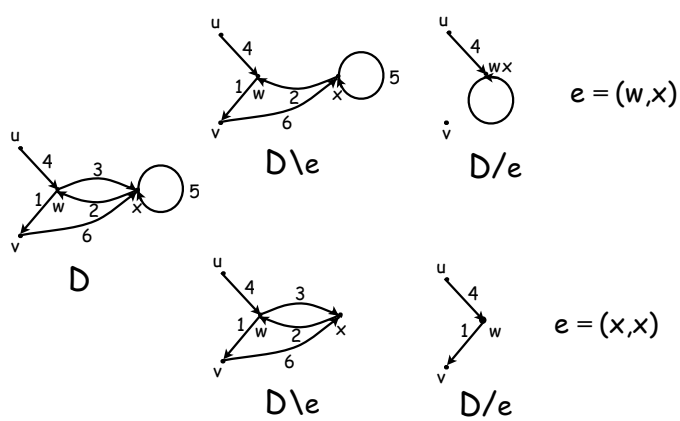

Figure 3: Deletion and contraction for the corresponding digraph D

We are next going to explicitly define the polynomial $C(D; x, y)$ for a weighted digraph D (see also [2] for other weighted generalizations of digraphs). We will eventually show that this is identical to the cover polynomial $C(M)$ of the associated matrix $M = M(D)$. A path-cycle cover S of

D is a collection of paths and cycles which disjointly cover all the vertices of D. The *weight* of a path or cycle is defined to be the product of the weights of all the edges in the path or cycle. The weight $w(S)$ of S is defined to be the product of all the weights of the paths and cycles in it. Finally, the coefficient $c_D(i,j)$ is the sum of all the weights of the path-cycle covers which consist of exactly i paths and j cycles. We claim the following also defines the cover polynomial.

Definition 3:

$$C(D;x,y) = \sum_{i,j} c_D(i,j) x^i y^j \tag{3}$$

We can also write $C(D;x,y)$ in the following form (which will be useful later when we deal with symmetric functions):

$$C(D;x,y) = \sum_{S} x^{\#\pi(S)} y^{\#\sigma(S)} w(S) \tag{4}$$

where S ranges over all path-cycle covers of D, $\#\pi(S)$ denotes the number of blocks in the partition $\pi(S)$ of the vertices induced by the *paths* of S, and $\#\sigma(S)$ denotes the number of blocks in the partition $\sigma(S)$ of the vertices induced by the *cycles* of S.

For positive integers r and s, we consider two sets of colors, say F_p and F_c where $|F_p| = r$ and $|F_c| = s$. Given some path-cycle cover S of D, an *S-feasible (r,s)-coloring* of D is a assignment of colors so that all the vertices in each cycle of S have the same F_c color, all the vertices in each path of S have the same F_p color, and further, vertices in different paths have different colors. (Vertices in different cycles can have the same color). We can rewrite (4) as follows:

$$C(D;r,s) = \sum_{S} \sum_{\kappa} w(S) \tag{5}$$

where S ranges over all path-cycle covers and κ ranges over all feasible colorings of S.

In the next section we will show that all three definitions are equivalent, that is, they define the same polynomial. As a consequence, this implies that

the deletion/contraction definitions are well-defined, i.e., the final result is independent of the order of the edges chosen.

In Table 1, we tabulate the various weighted path-cycle covers for the weighted digraph D shown in Figure 3. Notice that if we express (2) using the poly-

$c_D(i,j)$	path-cycle cover	weight	sum
$c(1,0)$	$uwvx$	24	**24**
$c(2,0)$	$u \mid wvx$	6	**60**
	$u \mid vxw$	12	
	$u \mid xwv$	2	
	$uw \mid vx$	24	
	$uwv \mid x$	4	
	$uwx \mid v$	12	
$c(3,0)$	$uw \mid x \mid v$	4	**16**
	$wv \mid u \mid x$	1	
	$vx \mid u \mid w$	6	
	$xw \mid u \mid v$	2	
	$wx \mid u \mid v$	3	
$c(4,0)$	$u \mid v \mid w \mid x$	1	**1**
$c(1,1)$	$uwv \mid xx$	20	**32**
	$u \mid xwvx$	12	
$c(2,1)$	$u \mid wv \mid xx$	5	**31**
	$u \mid uw \mid xx$	20	
	$u \mid v \mid wxw$	6	
$c(3,1)$	$u \mid v \mid w \mid xx$	5	**5**

Table 1: Table of weighted path-cycle covers for D.

nomial basis $x^{\underline{r}}y^s$, then we have

$$C(M) = (5x^{\underline{3}} + 31x^{\underline{2}} + 32x)y + x^{\underline{4}} + 16x^{\underline{3}} + 60x^{\underline{2}} + 24x. \tag{6}$$

These coefficients are exactly the weighted path-cycle sums appearing in the table.

4 Proof of equivalence.

We first claim that we can replace (**2b**) in Definition 2 of $C(D)$ by the following:
(**2b**$'$) For any $\beta \in R$, if e is a regular edge then

$$C(D) = C(D \setminus \beta e) + \beta C(D/e),$$

where $D \setminus \beta e$ is the digraph with the new edge weight $w(e) - \beta$ on the edge e, and D/e is the usual contraction.
To see that (**2b**) is equivalent to (**2b**$'$), we observe the following:

Lemma 1 $C(D \setminus e) + w(e)C(D/e) = C(D \setminus \beta e) + \beta C(D/e)$.

Proof: Note that if $\beta \neq w(e)$ then we have by (**2b**)

$$\begin{aligned} C(D \setminus \beta e) &= C((D \setminus \beta e) \setminus (w(e) - \beta)e) + (w(e) - \beta)C(D/e) \\ &= C(D \setminus e) + (w(e) - \beta)C(D/e). \end{aligned}$$

On the other hand, if $\beta = w(e)$ then the claim follows by definition. □

Lemma 2 *Suppose that D has vertex set $V = V_1 \cup V_2$ where $V_1 \cap V_2 = \emptyset$. Let D_i denote the induced digraph on V_i, $i = 1, 2$. Further, suppose that D has all the edges of the form (u_1, u_2) for all $u_1 \in V_1, u_2 \in V_2$, each of weight 1. Then*

$$C(D) = C(D_1)C(D_2).$$

Proof. It suffices to show that $C(D; r, s) = C(D_1; r, s)C(D_2; r, s)$ for positive integers r and s. We use the formulation in equation (5). For each feasible (r, s)-coloring of D_1 and D_2, the union (together with the edges from D_1 to D_2 joining appropriate endpoints of paths in the same color) is a feasible (r, s)-coloring of a path-cycle cover of D. Furthermore, the weight of the cover of D is the product of the weights of the covers of D_1 and D_2 (since all the crossing edges have weight 1). Thus, we have

$$C(D; r, s) = C(D_1; r, s)C(D_2; r, s)$$

for any choice of positive integers r, s. This implies

$$C(D; x, y) = C(D_1; x, y)C(D_2; x, y)$$

for indeterminates x and y. $\square$

Theorem 1 *The three definitions of $C(D)$ are equivalent.*

Proof: It easily checked that Definitions 1 and 2 are equivalent, since one is expressed in the language of matrices and the other in terms of digraphs.
We will first show that Definition 3 implies Definition 2. The proof will proceed by induction. Suppose that D contains a regular edge e. We consider the family $\mathbf{F}$ of path-cycle covers which consist of i paths and j cycles for some fixed i and j. Thus,

$$w(\mathbf{F}) = \sum_{F \in \mathbf{F}} w(F) = c_D(i, j).$$

We can write $\mathbf{F} = \mathbf{F}_1 \cup \mathbf{F}_2$ where

$$\begin{aligned} \mathbf{F}_1 &= \{F \in \mathbf{F} : e \notin F\}, \\ \mathbf{F}_2 &= \{F \in \mathbf{F} : e \in F\}. \end{aligned}$$

Clearly,

$$w(\mathbf{F}_1) = c_{D \setminus e}(i, j).$$

Note that for any $F \in \mathbf{F}_2$, the induced cover F/e is a path-cycle cover of D/e with i paths and j cycles. Also, $w(F) = w(e)w(F/e)$. Therefore,

$$\begin{aligned} c_D(i, j) &= w(\mathbf{F}) = \sum_{F \in \mathbf{F}} w(F) \\ &= \sum_{F \in \mathbf{F}_1} w(F) + \sum_{F \in \mathbf{F}_2} w(F) \\ &= \sum_{F \in \mathbf{F}_1} w(F \setminus e) + w(e) \sum_{F \in \mathbf{F}_2} w(F/e) \\ &= c_{D \setminus e}(i, j) + w(e) c_{D/e}(i, j) \end{aligned}$$

by Definition 3. Thus,

$$\begin{aligned} C(D;x,y) &= \sum_{i,j} c_D(i,j)x^i y^j \\ &= \sum_{i,j} \big(c_{D\setminus e}(i,j) + w(e)c_{D/e}(i,j)\big)x^i y^j \\ &= C(D\setminus e;x,y) + w(e)C(D/e;x,y) \end{aligned}$$

which is (**2b**).
Next, suppose that $e' = (u,u)$ denotes a loop at vertex u with weight $w(e')$. Again, we consider the set $\mathbf{F}$ of path-cycle covers of D, each of which has i paths and j cycles. Set $\mathbf{F} = \mathbf{F}'_1 \cup \mathbf{F}'_2$ where

$$\begin{aligned} \mathbf{F}'_1 &= \{F \in \mathbf{F} : e' \notin F\}, \\ \mathbf{F}'_2 &= \{F \in \mathbf{F} : e' \in F\}. \end{aligned}$$

As before, it is clear that $w(\mathbf{F}'_1) = c_{D\setminus e'}(i,j)$. Also, for $F \in \mathbf{F}'_2$ we have $w(F) = w(e')w(F')$ where F' is the path-cycle cover induced from F on the vertex set $V \setminus \{u\}$. Therefore,

$$\begin{aligned} c_D(i,j) = w(\mathbf{F}) &= \sum_{F\in\mathbf{F}} w(F) \\ &= \sum_{F\in\mathbf{F}'_1} w(F) + \sum_{F\in\mathbf{F}'_2} w(F) \\ &= \sum_{F\in\mathbf{F}'_1} w(F\setminus e') + w(e')\sum_{F\in\mathbf{F}'_2} w(F/e') \\ &= c_{D\setminus e'}(i,j) + w(e')c_{D/e'}(i,j-1) \end{aligned}$$

by Definition 3. Therefore,

$$\begin{aligned} C(D;x,y) &= \sum_{i,j} c_D(i,j)x^i y^j \\ &= \sum_{i,j} (c_{D\setminus e'}(i,j)x^i y^j + w(e')\,y\,c_{D/e'}(i,j-1)x^i y^{j-1} \\ &= C(D\setminus e';x,y) + w(e')\,y\,C(D/e';x,y), \end{aligned}$$

i.e.,

$$C(D) = C(D\setminus e') + w(e')\,y\,C(D/e')$$

which is (**2c**).
For the final case, suppose $D = I_n$, the digraph consisting of n isolated vertices. In this case, there is only one path-cycle cover, namely n paths of length 0, so by Definition 3, $C(I_n) = x^{\underline{n}}$. This is just (**2a**) and so the proof that Definition 3 implies Definition 2 is finished.

It remains to show that Definition 2 implies Definition 3. For the case that $D = I_n$, the proof that (3) holds is straightforward. Assume that D has a regular edge e. Thus,

$$\begin{aligned} C(D) &= C(D \setminus e) + C(D/e) \\ c_D(i,j) &= c_{D\setminus e}(i,j) + w(e)c_{D/e}(i,j) \\ &= \sum_{F\in\mathbf{F}_1} w(F) + \sum_{F\in\mathbf{F}_2} w(F) \quad \text{by induction} \\ &= \sum_F w(F) \end{aligned}$$

where the sums are over all path-cycle covers F with i paths and j cycles. This shows that (3)) holds. This completes the proof of Theorem 1. □

5 A generalized cover polynomial

In the recursive definition of $C(D)$ (Definition 2), a choice was made in (**2a**) on how to define the value of $C(D)$ when $D = I_n$, the digraph with n vertices and no edges. The choice was to define $C(I_n) = x^{\underline{n}}$. Of course, other choices are possible, resulting in other polynomials. In particular, inspired by [7], D'Antona and Munarini [4] introduced what they termed the *geometric* cover polynomial $\tilde{C}(D; x, y)$. This polynomial satisfies the same deletion/contraction rules as the usual cover polynomial (i.e., (**2b**) and (**2c**)), but (**2a**) is replaced by defining $\tilde{C}(I_n) = x^n$. In this section we consider a more general polynomial $C_t(D)$ which generalizes both of these polynomials.

The polynomial $C_t(D; x, y)$ is defined for any real t (which could be negative). It is generated by using the deletion/contraction rules of Definition 2, except that (**2a**) is replaced by (**2a$_\mathbf{t}$**):

$$(\mathbf{2a_t}): \qquad C_t(I_n; x, y) = x^{\underline{n,t}} \stackrel{\text{def}}{=} x(x-t)\cdots(x-(n-1)t) = \prod_{i=0}^{n-1}(x-it).$$

Thus, the cover polynomial is just $C_1(D)$ and the geometric cover polynomial is just $C_0(D)$. We can also explicitly express $C_t(D;x,y)$ in several alternate forms which will be useful later. For example, we can also write

$$C_t(D;x,y) = \sum_S x^{\underline{\#\pi(S),t}} y^{\#\sigma(S)} w(S) \tag{7}$$

where S ranges over all path-cycle covers of D (compare with (4)).

We point out that for $t \neq 0$, we can express C_t in term of the usual cover polynomial $C(D_t)$ of a modified digraph D_t. Specifically, D_t will have the same vertices and edges as D. However, if the edge weight of e is $w(e)$ in D, then e will have edge weight $\frac{w(e)}{t}$ in D_t.

Then the cover polynomials $C_t(D)$ and $C(D_t)$ are related as follows (where n denotes the number of vertices of D):

Lemma 3 *For $t \neq 0$,*

$$C_t(D;x,y) = t^n C(D_t; x/t, y) \tag{8}$$

Proof: By (4) we can write

$$\begin{aligned} C_t(D;x,y) &= \sum_S x^{\underline{\#\pi(S),t}} y^{\#\sigma(S)} w(S) \\ &= \sum_S \overbrace{x(x-t)(x-2t)\dots}^{\#\pi(S)} y^{\#\sigma(S)} w(S) \\ &= \sum_S \overbrace{\left(\frac{x}{t}(\frac{x}{t}-1)\dots\right)}^{\#\pi(S)} t^{\#\pi(S)} y^{\#\sigma(S)} w(S) \qquad (9) \\ &= \sum_S \overbrace{\left(\frac{x}{t}(\frac{x}{t}-1)\dots\right)}^{\#\pi(S)} t^{\#\pi(S)} y^{\#\sigma(S)} w_t(S) t^{|E(S)|} \end{aligned}$$

$$C_t(D;x,y) = \sum_S \overbrace{\left(\frac{x}{t}(\frac{x}{t}-1)\dots\right)}^{\#\pi(S)} t^{\#\pi(S)} y^{\#\sigma(S)} w_t(S) t^{n-\#\pi(S)} \tag{10}$$

$$= \sum_S \overbrace{\left(\frac{x}{t}(\frac{x}{t}-1)\dots\right)}^{\#\pi(S)} y^{\#\sigma(S)} w_t(S) t^n$$

$$= t^n C(D_t, \frac{x}{t}, y)$$

where $w_t(S) = \prod_{e\in S} w_t(e)$ and $|E(S)| = n - \#\pi(S)$ denotes the number of edges in S. □

Making the substitutions $x = rt,\ y = s$ for positive integers r, s, we can rewrite (8) as follows:

Lemma 4 *For positive integers r, s and any real $t \neq 0$, we have*

$$C_t(D;rt,s) = \sum_S \sum_\kappa t^{\#\pi(S)} w(S) \tag{11}$$

where S ranges over all path-cycle covers of D, and κ runs over all S-feasible (r,s)-colorings of the vertices of D, that is, all vertices in any cycle get one of s colors, all of the vertices in any path get one of r colors, and vertices in different paths get different colors.

The extension of Lemma 1 for general values of t clearly holds (by definition).

To extend Lemma 2 for general values of $t \neq 0$, we do the following. Let $D_1 = (V_1, E_1)$ and $D_2 = (V_2, E_2)$ be weighted digraphs with edge weight functions w_1 and w_2, respectively. Define the product $D_1 \overset{(t)}{\times} D_2$ to be the digraph with vertex set $V_1 \cup V_2$, edge set $E_1 \cup E_2$ (with all edge weights preserved), and in addition, all the "crossing" edges (u_1, u_2) with $u_1 \in V_1, u_2 \in V_2$, each having weight t.

Lemma 5

$$C_t(D_1 \overset{(t)}{\times} D_2; x, y) = C_t(D_1; x, y) C_t(D_2; x, y). \tag{12}$$

Proof: From (11), we have for any $r, s \in \mathbb{P}$,

$$\begin{aligned} C_t(D_1 \overset{(t)}{\times} D_2; rt, s) &= \sum_S \sum_\kappa t^{\#\pi(S)} w(S) \\ &= \sum_{S_1,S_2} \sum_{\kappa_1,\kappa_2} t^{\#\pi(S_1)+\#\pi(S_2)-\#\pi_S(X)} w(S_1) w(S_2) t^{\#\pi_S(X)} \end{aligned}$$

where $\#\pi_S(X)$ denotes the number of paths of S which contain a crossing edge, the factor of $t^{-\#\pi_S(X)}$ coming from double-counting the paths that are in both S_1 and S_2, and the (second) factor of $t^{\#\pi_S(X)}$ coming from the $\#\pi_S(X)$ additional crossing edges. Of course, κ_i denotes an S_i-feasible (r, s)-coloring of D_i. Continuing, we have

$$\begin{aligned} C_t(D_1 \overset{(t)}{\times} D_2; rt, s) &= \sum_S \sum_\kappa t^{\#\pi(S)} w(S) \\ &= \sum_{S_1,S_2} \sum_{\kappa_1,\kappa_2} \left(t^{\#\pi(S_1)} w(S_1)\right) \left(t^{\#\pi(S_2)} w(S_2)\right) \\ &= \sum_{S_1,\kappa_1} t^{\#\pi(S_1)} w(S_1) \sum_{S_2,\kappa_2} t^{\#\pi(S_2)} w(S_2) \\ &= C_t(D_1; rt, s) C_t(D_2; rt, s). \end{aligned} \tag{13}$$

Since (13) holds for all $r, s \in \mathbb{P}$, Lemma 5 follows. □

The extension of Lemma 2 to the case of $t = 0$ is worth noting. The proof is not difficult and can be found in [4]. In this case, $C_0(D) = \tilde{C}(D)$ is just the geometric cover polynomial and Lemma 2 becomes the natural product theorem (which the Tutte polynomial satisfies, for example):

Lemma 6 *If D if the disjoint union of D_1 and D_2 then*

$$\tilde{C}(D) = \tilde{C}(D_1)\tilde{C}(D_2)$$

6 Evaluating $C_t(D; x, y)$ at specific points

The question of the computational difficulty of evaluating $C(D; x, y)$ and $\tilde{C}(D; x, y)$ at various points in the (x, y)-plane has been addressed by a number of researchers ([1, 2, 3]). This is similar to the well known analogs for

the Tutte polynomial for which it is known that there are just *eight* points in the (x, y) plane at which it can be evaluated efficiently (with the exception of the points on the curve $(x-1)(y-1) = 1$; cf. [11, 12, 17]). It turns out that for the cover polynomial $C(D; x, y)$ there are only *three* points in the (x, y) plane for which $C(D; x, y)$ can be evaluated in polynomial time for arbitrary (unweighted) digraphs D. These are the points $(x, y) = (0, 0), (0, -1)$ and $(1, -1)$. For all other points it is $\#P$-hard to evaluate $C(D; x, y)$ for general D. For general weighted digraphs D on n vertices, $C(D; 0, -1) = (-1)^n det(D)$ (which is easy to compute) while $C(D; 0, 1) = per(D)$ (which is $\#P$-hard to compute). In this sense, we can think of $C(D; 0, y)$ as interpolating between the determinant of D and the permanent of D as y goes from -1 to 1.

It is not hard to see why $C(D; 0, -1) = (-1)^n det(D)$. Setting $x = 0$ in $C(D; x, y)$ results in a polynomial in y alone, so that the only coefficients $c_D(i, j)$ left have $i = 0$, i.e., correspond to path-cycle covers with only cycles. Thus, $c_D(0, j)$ is a weighted sum over all permutation choices of entries of D. Since the sign of the permutation π is exactly $(-1)^{n+\#\pi}$, and when $y = -1$, consecutive powers of y in the polynomial alternate in sign, then we end up with the determinant of D (i.e., for M, the adjacency matrix corresponding to D). In Figure 4, we show one such interpolation for a small matrix M.

The third point for which $C(D; x, y)$ can be evaluated in polynomial time is the point $(1, -1)$. For this case, $C(D; 1, -1) = C(D; 0, -1) - C(D'; 0, -1)$ where D' is the digraph formed from D by adding a new vertex x_0 to V with all weight 1 edges (x_0, v) and (v, x_0) for all $v \in V$. To see this, let us rewrite $C(D; x, y)$ in the following form (cf. (4)):

$$C(D; x, y) = \sum_S x^{\underline{\#\pi(S)}} y^{\#\sigma(S)} w(S) \tag{14}$$

where S ranges over all path-cycle covers of D. Thus, substituting $x = 1$ shows that the only S which can contribute to the sum have $\#\pi(S) \leq 1$ since $1^{\underline{k}}$ vanishes for $k \geq 2$. So the allowable path-cycle covers S have at most one path. However, those with one path exactly correspond to cycle covers of D', by connecting the ends of the path to the added vertex x_0 to form a cycle in D'. The sign change comes from the factor of $(-1)^n$ in the value of $C(D; 0, -1) = (-1)^n det(D)$. It also follows that for an n by n matrix M, the characteristic polynomial for M is given by $C(\lambda I_n - M; 0, -1)$ where I_n

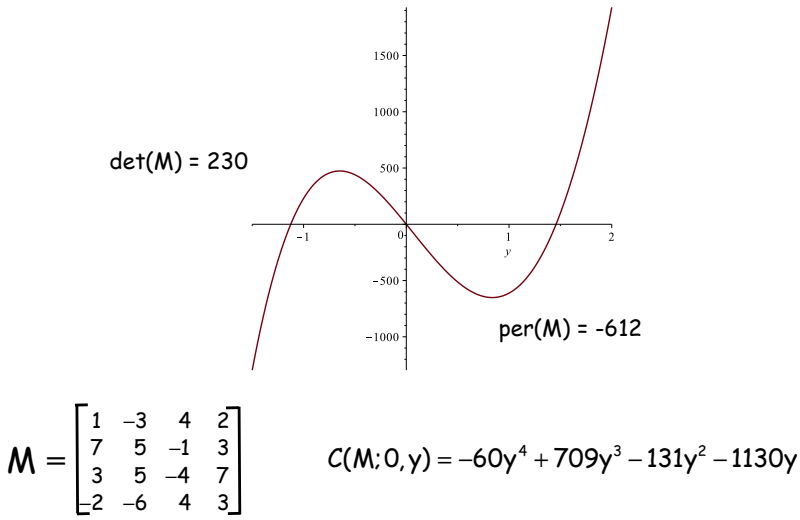

Figure 4: Transition from determinant to permanent for a small matrix M

denotes the n by n identity matrix.

As pointed out in [2, 3], the *geometric* cover polynomial $\tilde{C}(D; x, y)$ behaves differently from this perspective. For this polynomial, there are only *two* points at which it can evaluated in polynomial time for general digraphs, namely, $(0, 0)$ and $(0, -1)$ (which give the same values as for $C(D; x, y)$ since the base values on I_n are the same when $x = 0$).

The same analysis shows that for $C_t(D; x, y)$, its values at $(0, 0), (0, -1)$ and $(t, -1)$ can all be computed in polynomial time. At all other points, it is $\#P$-hard to evaluate in general.

7 Reciprocity

A rather amazing reciprocity theorem for $C(D; x, y)$ for unweighted digraphs D was discovered independently by Gessel [10] and Chow [5]. To state it, we define the *complement* D' of D to be the digraph in which the roles of edge and non-edge are interchanged. That is, the edges of D' are exactly the non-edges of D. In terms of the corresponding adjacency matrices for the digraphs, $M' = J_n - M$ where J_n denotes the n by n matrix of all 1's, and we assume that D has n vertices.

Theorem [5, 10] For all unweighted digraphs on n vertices;

$$C(D; x, y) = (-1)^n C(D'; -x - y, y). \tag{15}$$

Chow's proof [5] was a consequence of a more general result derived from his *symmetric function* generalization of the cover polynomial, and used an impressive array of tools from symmetric function theory. We will return to this in the next section.

Our goal in this section is to show that this reciprocity relationship holds much more generally for the polynomial $C_t(D; x, y)$ for *all* weighted digraphs and *all* values of t. In this case, D' is defined to be the *dual* digraph formed from D by replacing each edge weight $w(e)$ in D by $w'(e) = t - w(e)$. (In terms of matrices, $M' = tJ_n - M$ where M has dimension n).

Theorem 2. For all weighted digraphs D and all t,

$$C_t(D'; -x - ty, y) = (-1)^n C_t(D; x, y) \tag{16}$$

Note that the dual of D' is just D.

Proof: Let n denote the number of vertices of D. We first deal with the case $\mathbf{t = 0}$. In this case we observe that

$$c_D(i, j) = c_{D'}(i, j)(-1)^{n-i}$$

since any path-cycle cover of D with i paths and j cycles has $n - i$ edges.

Therefore

$$\begin{aligned} C_0(D;x,y) &= \sum_{i,j} c_D(i,j)x^i y^j \\ &= \sum_{i,j} c_{-D}(i,j)(-1)^n(-x)^i y^j \\ &= (-1)^n C_0(-D;-x,y) \end{aligned}$$

as required.

Now, suppose $\mathbf{t} \neq \mathbf{0}$. The proof will proceed by induction on the number of edges of D. We first will deal with the base case for $D = I_n$, where we assume the theorem holds for I_{n-1}. (The result for $n = 0$ is immediate). Let $D = I_1$, i.e. $M = [0]$, the 1 by 1 zero matrix. Then the dual matrix $M' = [t]$. Thus,

$$C_t(M;x,y) = x \text{ and } C_t(M';x,y) = x + ty$$

since $M' = [t]$ consists of a single loop of weight t. Therefore

$$C_t(M';-x-ty,y) = (-x-ty) + ty = -x = -C_t(M;x,y)$$

as required.

Next, assume that $D = I_n$ for some $n > 1$. Thus, M is an all 0 matrix of dimension n with the dual matrix $M' = tJ_n$. We want to show

$$C_t(tJ_n;-x-ty,y) = (-1)^n x^{\underline{n,t}} = (-1)^n C_t(I_n;x,y). \tag{17}$$

Let us label the vertices of the dual digraph D' as $\{v_1, v_2, \ldots, v_n\}$. We consider the edges $e_i = (v_1, v_i)$ in D' for $i = 2, 3, \ldots, n$, where e_1 is the loop at v_1. We have $w(e_i) = t$ for $1 \leq i \leq n$. Let $D'_i = D'_{i-1} \setminus e_i$ for $1 \leq i \leq n$ with $D'_0 = D'$. We will now start reducing D' by one loop at a time, using the

induction hypothesis as we proceed. Thus,

$$
\begin{aligned}
&(-1)^n C_t(D'; -x-ty, y) \\
&= C_t(D' \setminus e_1; -x-ty, y) + tyC_t(tJ_{n-1} - I_{n-1}; -x-ty, y) \\
&= C_t(D'_1; -x-ty, y) + ty(-1)^n C_t(I_{n-1}; x, y) \quad \text{(by induction)} \\
&= C_t(D'_1 \setminus e_2; -x-ty, y) + tC_t(D'_1 \setminus e_2; -x-ty, y) \\
&+ ty(-1)^n C_t(I_{n-1}; x, y) \quad \text{(by deletion and contraction)} \\
&= C_t(D'_2; -x-ty, y) + C_t(tJ_{n-1} - I_{n-1}; -x-ty, y) \\
&+ tyC_t(tJ_{n-1} - I_{n-1}; -x-ty, y) \quad \text{(by induction)} \qquad (18) \\
&= C_t(D'_2 \setminus e_3; -x-ty, y) + 2tC_t(tJ_{n-1} - I_{n-1}; -x-ty, y) \\
&+ ty(-1)^n C_t(I_{n-1}; x, y) \\
&= \ldots\ldots\ldots\ldots\ldots \\
&= C_t(D'_n; -x-ty, y) + (n-1)C_t(tJ_{n-1} - I_{n-1}; -x-ty, y) \\
&+ ty(-1)^n C_t(I_{n-1}; x, y)
\end{aligned}
$$

Note that the vertex set in D'_n can be regarded as consisting of the disjoint union of two parts: $\{v_1\}$ and $\{v_2, v_3, \ldots, v_n\}$ with all edges (v_i, v_1) going from $\{v_2, v_3, \ldots, v_n\}$ to $\{v_1\}$ and all having weight t. We can now apply the product theorem of Lemma 5 to obtain

$$
\begin{aligned}
C_t(D'_n; -x-ty, y) &= C_t(I_1; -x-ty, y)C_t(tJ_{n-1} - I_{n-1}; -x-ty, y) \qquad (19) \\
&= (-x-ty)C_t(tJ_{n-1} - I_{n-1}; -x-ty, y)
\end{aligned}
$$

Substituting into (18), we obtain

$$
\begin{aligned}
&(-1)^n C_t(D'; -x-ty, y) \\
&= \big((-x-ty) + (n-1)t\big)C_t(tJ_{n-1} - I_{n-1}; -x-ty, y) \\
&\quad + ty(-1)^n C_t(I_{n-1}; x, y) \\
&= (-x-ty-(n-1)t)(-1)^n C_t(I_{n-1}; x, y) + ty(-1)^n C_t(I_{n-1}; x, y) \\
&\qquad \text{(by induction)} \\
&= (x-(n-1)t)x^{\underline{n-1,t}} = x^{\underline{n,t}}.
\end{aligned}
$$

This proves Theorem 2 for the base case that D has no edges.

Next, suppose our digraph D has n vertices and at least one regular edge $e = (u, v), u \neq v$. We assume by induction that Theorem 2 holds for all

digraphs with fewer than n vertices and also for all digraphs on n vertices with fewer edges than D. We know

$$\begin{aligned} C_t(D;x,y) &= C_t(D\setminus e;x,y) + w(e)C_t(D/e;x,y) \\ &= (-1)^n C_t(tJ_n - (D\setminus e); -x-ty, y) \\ &- w(e)(-1)^n C_t(tJ_{n-1} - (D/e); -x-ty, y) \qquad \text{(by induction)} \end{aligned} \tag{20}$$

Let F denote $tJ_n - (D\setminus e)$. Certainly $e \in F$ and has weight t.

Claim:

$$F/e = tJ_{n-1} - (D/e) \tag{21}$$

Proof: Check the weights of the edges in $tJ_{n-1} - (D/e)$ and F/e. All weights of edges not involving the new (contracted) vertex uv remain the same. Also all weights of edges involving uv remain the same as well. Also, the loop at uv has weight $t - w(v,u)$. This proves the Claim.

Simplifying (20), we have

$$C_t(D;x,y) = (-1)^n C_t(F; -x-ty, y) - w(e)(-1)^n C_t(F/e; -x-ty, y). \tag{22}$$

Now we will use Lemma 1 (for C_t), namely

$$C_t(F) = C_t(F\setminus \beta e) + \beta C_t(F/e) \tag{23}$$

with $\beta = w(e)$. Thus,

$$\begin{aligned} C_t(D;x,y) &= (-1)^n\big(C_t(F; -x-ty, y) - w(e)C_t(F/e; -x-ty, y)\big) \\ &= (-1)^n C_t(F\setminus w(e)e; -x-ty, y). \end{aligned} \tag{24}$$

by deletion and contraction using the edge $w(e)e$. However, it is not hard to check that

$$F' = F\setminus w(e)e = \big(tJ_n \setminus (D\setminus e)\big)\setminus w(e)e = tJ_n - D.$$

Therefore, we have

$$C_t(D;x,y) = (-1)^n C_t(tJ_n - D; -x-ty, y) \tag{25}$$

which is what was needed.

Finally, suppose D has only loops. Let e denote a loop at vertex v with weight $w(e)$. Then by induction

$$\begin{aligned} C_t(D;x,y) &= C_t(D\setminus e;x,y) + w(e)yC(D/e;x,y) \\ &= (-1)^n C_t(tJ_n - (D\setminus e); -x-ty, y) \\ &+ (-1)^{n-1} w(e)yC_t(tJ_{n-1} - (D\setminus e); -x-ty, y). \end{aligned} \tag{26}$$

Set $F = tJ_n - (D\setminus e)$. It is easy to check that

$$F\setminus v = tJ_{n-1} - (D\setminus v).$$

Thus, (26) can be rewritten as:

$$\begin{aligned} C_t(D;x,y) &= (-1)^n\big(C_t(F;-x-ty,y) - w(e)yC(F\setminus v;-x-ty,y)\big) \\ &= (-1)^n\big(C_t(F\setminus w(e)e;-x-ty,y)\big) \end{aligned} \tag{27}$$

However, checking all the relevant edge weights confirms that

$$F\setminus w(e)e = \big(tJ_n - (D\setminus e)\big)\setminus w(e)e = tJ_n - D. \tag{28}$$

Hence, plugging into (27) gives us:

$$C_t(D;x,y) = (-1)^n C_t(tJ_n - D; -x-ty, y) \tag{29}$$

which is exactly what was needed to complete the proof of Theorem 2. □

It should be noted that the theorem also applies for $t = 0$. Since $C_0(D;x,y) = \tilde{C}(D;x,y)$ is the geometric cover polynomial and the dual $D' = -D$, the reciprocity result we get in this case is:

$$\tilde{C}(-D;-x,y) = (-1)^n\tilde{C}(D;x,y)$$

which isn't particularly impressive!

8 Symmetric functions

In [13], Stanley introduced what he called the *chromatic symmetric function* X_G of a graph G, generalizing the usual chromatic polynomial χ_G for G.

The basic setup is this. For an undirected graph $G = (V, E)$, we say that $\kappa : V \to \mathbb{P}$ (the set of positive integers) is a proper coloring of G if κ maps adjacent vertices to different values (= colors). We let $x_1, x_2, x_3, \ldots$ be (commuting) indeterminates and suppose $V = \{v_1, v_2, \ldots, v_n\}$. Then define

$$X_G = X_G(\mathbf{x}) = X_G(x_1, x_2, x_3, \ldots) = \sum_{\kappa} x_{\kappa(v_1)} x_{\kappa(v_2)} \ldots x_{\kappa(v_d)}$$

where the sum ranges over all proper colorings κ of G. X_G is clearly a symmetric function in the x_i and as such, can be expanded using different bases in the algebra of symmetric functions (cf. [13, 14, 15]). Also, if we let $X_G(1^n)$ denote the function we get by substituting $x_i = 1$ for $1 \leq i \leq n$ and $x_j = 0$ for $j > n$, then we have $X_G(1^n) = \chi_G(n)$. It is natural to ask whether this approach could be applied to other graph polynomials such the Tutte polynomial, the cover polynomial, etc. Indeed, this was successfully carried out for the cover polynomial $C(D)$ for digraphs by Tim Chow (in his 1995 dissertation; see [5]).

In this section, we will show how this extension to a symmetric function can be done for the general cover polynomial $C_t(D)$, where D is any weighted digraph with edge weights in a commutative ring R with identity, and t is any real number. In fact, we will enlarge the category of digraphs D we consider by assuming that in addition to the edge weights $w(e)$ of D, each *vertex* v of D has some positive integer weight $w_0(v) \in \mathbb{P}$ attached to it as well. We can call D a *doubly-weighted* digraph.

Let us denote this general symmetric function by $\Xi_t(D) = \Xi(D)$ where we will usually suppress the dependence on t when $t = 1$. We will show that $\Xi(D)$ satisfies a reciprocity theorem (which Chow [5] did for his symmetric function). In addition, we will show that $\Xi(D)$ can be obtained by a deletion/contraction procedure.

We now introduce the quantities we will need to define $\Xi(D)$. We will work with two sets of commuting indeterminates: $\mathbf{x} = (x_1, x_2, \ldots)$ and $\mathbf{y} = (y_1, y_2, \ldots)$. For a vector $\beta = (\beta_1, \beta_2, \ldots)$, we define

$$\mathbf{x}^{\beta} = x_1^{\beta_1} x_2^{\beta_2} \ldots\ldots.$$

Definition: For a partition $\lambda = (\lambda_1, \lambda_2, \ldots)$ of n, denoted by $\lambda \vdash n$, we

define the usual symmetric function

$$m_\lambda = \sum_\beta \mathbf{x}^\beta$$

where β ranges over all *distinct* permutations of λ.
For example, for the partition $\lambda = (3,3,2,1,0,0,\ldots) \vdash 9$, we have

$$m_\lambda(\mathbf{x}) = m_{3,3,2,1}(\mathbf{x}) = \sum_{\substack{i,j,k,l \text{ distinct} \\ i<j}} x_i^3 x_j^3 x_k^2 x_l$$

Definition: The *sign* of a partition $\lambda \vdash n$ is defined by $sgn(\lambda) = (-1)^{n-\#\lambda}$ where $\#\lambda$ is the number of blocks of λ.

Definition: For a partition $\lambda = (\lambda_1, \lambda_2, \ldots)$, we use the notation $r_\lambda! = r_1! r_2! \ldots$, where r_i denotes the number of blocks of λ of size i.

Definition: The augmented function $\tilde{m}_\lambda(\mathbf{x})$ is defined by

$$\tilde{m}_\lambda(\mathbf{x}) = r_\lambda! m_\lambda(\mathbf{x}).$$

We also define the usual power symmetric function:

Definition:

$$p_j(\mathbf{x}) = \sum_i x_i^j \quad \text{and for } \lambda \vdash n, \quad p_\lambda(\mathbf{x}) = p_{\lambda_1} p_{\lambda_2} \ldots.$$

Both $\tilde{m}_\lambda$ and p_λ are defined to be 1 if $\#\lambda = 0$.

Suppose S is a path-cycle cover of D. By $\pi(S)$ we mean the partition of the vertices induced by the *paths* of S. If B is a block of $\pi(S)$ then the weight $w_0(B)$ of B denotes the sum of all the vertex weights $w_0(v)$ for $v \in B$. Also, by $w_0(\pi(S))$ we mean the *partition* $(w_0(B_1), w_0(B_2), \ldots)$ formed by the weights of the blocks of $\pi(S)$. We will usually abbreviate this by deleting w_0 when the meaning is clear. For example, p_σ will stand for $p_{w_0(\sigma)}$, etc. Further, we denote the number of blocks of $\pi(S)$ by $\#\pi(S)$, the number of vertices of $\pi(S)$ by $|\pi(S)|$, the number of edges of S by $|E(S)|$, and finally, the sum of the weights of the vertices $\sum_v w_0(v)$ of D by $w_0(D)$. The analogous definitions apply to $\sigma(S)$, the vertex partition induced by the cycles of S.

Finally, we denote by $w(S)$ the product of all the edge weights $w(e)$ for $e \in S$, with $w(\pi(S))$ and $w(\sigma(S))$ defined accordingly.

We now give the first definition of our symmetric function generalization $\Xi(D;\mathbf{x})$. (We will only consider the case $t = 1$ at this point. More general values of t will be treated later).

First definition of $\Xi(D;\mathbf{x},\mathbf{y})$.

$$\Xi(D;\mathbf{x},\mathbf{y}) = \sum_S \tilde{m}_{\pi(S)}(\mathbf{x}) p_{\sigma(S)}(\mathbf{y}) w(S) \tag{30}$$

where S ranges over all path-cycle covers of the (doubly-weighted) digraph D.

If all the vertex weights in D are 1 (the usual case), then the next result follows immediately from the definitions.

Proposition.

$$\Xi(D;1^i,1^j) = C(D;i,j).$$

where $1^k = (\overbrace{1,1,\ldots,1}^{k},0,0,0,\ldots)$, i.e., $x_i = 1$ for $1 \le i \le k$, and $x_i = 0$ for $i > k$.

Note that in this case, $\tilde{m}_\lambda(1^i)$ is equal to the number of ways of coloring the blocks of a partition λ with i distinct colors, and is equal to $i^{\underline{\#\lambda}}$. Similarly, $p_\lambda(1^j)$ is equal to the number of ways of coloring the blocks of λ with j (not necessarily distinct) colors, and is equal to $j^{\#\lambda}$.

We first show a simple example. Let D be the digraph shown in Figure 5, where we will assume all the vertex weights are 1. In this case $w_0(B)$ for a block of a partition is just the cardinality of B.

A quick computation shows that

$$C(D;x,y) = cdy^2 + (ab + cx + dx)y + ax + bx + x^2 - x \tag{31}$$

D has seven path-cycle covers S. We list them below with their contributions to $\Xi(D)$.

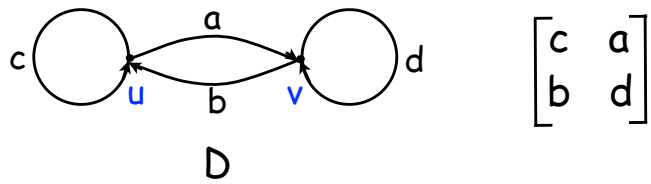

Figure 5: Computing $\Xi(D)$ for a simple example

path-cycle cover S	$\pi(S)$	$\sigma(S)$	term in sum	contribution
S_1	$u \to v$	$\emptyset$	$\tilde{m}_{\pi(S_1)} \cdot 1 = m_2(\mathbf{x})$	$a \sum_i x_i^2$
S_2	$v \to u$	$\emptyset$	$\tilde{m}_{\pi(S_2)} \cdot 1 = m_2(\mathbf{x})$	$b \sum_i x_i^2$
S_3	$u \mid v$	$\emptyset$	$\tilde{m}_{\pi(S_3)} \cdot 1 = 2m_{1,1}(\mathbf{x})$	$2 \sum_i x_i x_j$
S_4	u	v	$\tilde{m}_{\pi(S_4)} p_{\sigma(S_4)} = m_1(\mathbf{x}) p_1(\mathbf{y})$	$d \sum_i x_i \sum_j y_j$
S_5	v	u	$\tilde{m}_{\pi(S_5)} p_{\sigma(S_5)} = m_1(\mathbf{x}) p_1(\mathbf{y})$	$c \sum_i x_i \sum_j y_j$
S_6	$\emptyset$	$u \leftrightarrows v$	$1 \cdot p_{\sigma(S_6)} = p_2(\mathbf{y})$	$ab \sum_i y_i^2$
S_7	$\emptyset$	$u \circlearrowright \quad v \circlearrowright$	$1 \cdot p_{\sigma(S_7)} = p_{1,1}(\mathbf{y})$	$cd\big(\sum_i y_i\big)^2$

Table 2: Table of weighted path-cycle covers for D.

Thus, we find

$$\begin{aligned}\Xi(D;\mathbf{x},\mathbf{y}) &= (a+b)\sum_i x_i^2 + 2\sum_{i<j} x_i x_j + (c+d)\sum_i x_i \sum_j y_j \\ &\quad + ab\sum_i y_i^2 + cd\big(\sum_i y_i\big)^2.\end{aligned}$$

Therefore,

$$\begin{aligned}\Xi(D;1^i,1^j) &= (a+b)i + 2\binom{i}{2} + (c+d)ij + abj + cdj^2 \\ &= cdj^2 + (c+d)ij + abj + i^2 + (a+b-1)i \\ &= C(D;i,j)\end{aligned}$$

as it should!

We now give the second definition of $\Xi(D)$. Let D be a (doubly weighted) digraph.

Second definition of $\Xi(D;\mathbf{x},\mathbf{y})$ (Deletion and contraction).

(i) If e is a regular edge then

$$\Xi(D;\mathbf{x},\mathbf{y}) = \Xi(D\setminus e,\mathbf{x},\mathbf{y}) + w(e)\Xi(D/e,\mathbf{x},\mathbf{y});$$

The contracted digraph $\Xi(D/e,\mathbf{x},\mathbf{y})$ is formed as shown in Figure 6. The contracted vertex uv has weight $w_0(uv) = w_0(u) + w_0(v)$. In the deleted digraph $\Xi(D\setminus e,\mathbf{x},\mathbf{y})$, the edge e is simply removed.

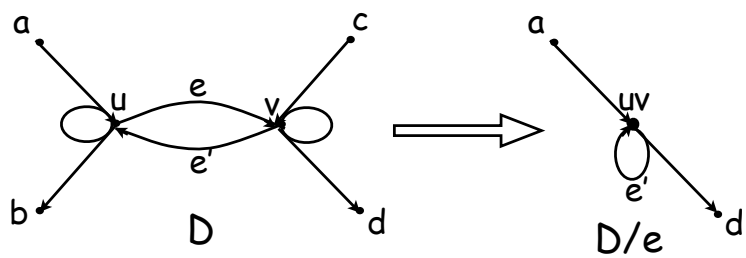

Figure 6: The contracted digraph $\Xi(D/e,\mathbf{x},\mathbf{y})$

(ii) If e is a loop at v and $w_0(v) = d$ then

$$\Xi(D;\mathbf{x},\mathbf{y}) = \Xi(D\setminus e,\mathbf{x},\mathbf{y}) + w(e)p_d(\mathbf{y})\Xi(D/e,\mathbf{x},\mathbf{y});$$

In the contracted digraph $\Xi(D/e,\mathbf{x},\mathbf{y})$, the vertex v and all incident edges are removed, whereas in the deleted digraph $\Xi(D\setminus e,\mathbf{x},\mathbf{y})$, only the loop e is removed. As usual, we define $\Xi(\emptyset;\mathbf{x},\mathbf{y}) = 1$ for the empty digraph.

(iii) (The base case): If D has *no* edges and has vertex set $\{v_1, v_2, \ldots, v_r\}$ with $w_0(v_i) = \alpha_i,\ 1 \le i \le r$, then

$$\Xi(D;\mathbf{x},\mathbf{y}) = \tilde{m}_\alpha(\mathbf{x}) = \tilde{m}_{\alpha_1,\alpha_2,\ldots,\alpha_r}(\mathbf{x}).$$

If $r = 0$ then D is the empty digraph and we set $\Xi(D;\mathbf{x},\mathbf{y}) = 1$.

Our next task will be to show that these two definitions are equivalent.

Assuming that $\Xi(D;\mathbf{x},\mathbf{y})$ is defined by (30), we have

Lemma 7

$$\Xi(D;\mathbf{x},\mathbf{y}) = \sum_{(S,\kappa)} w(S) \prod_{u\ \textit{is in a path}} x_{\kappa(u)}^{w_0(u)} \prod_{v\ \textit{is in a cycle}} y_{\kappa(v)}^{w_0(v)}.$$

where the sum is over all path-cycle colorings (S, κ) where is S is a path-cycle cover and κ is a coloring $\kappa : V \to \mathbb{P}$ so that vertices in the same path or cycle have the same color, and vertices in different paths have different colors.

Proof: For each S, the paths and cycles are colored independently so the sum over κ factors into a product of a symmetric function in $\mathbf{x}$ and a symmetric function in $\mathbf{y}$. Each cycle is monochromatic, giving the term $p_{\sigma(S)(\mathbf{y})}$. Coloring the paths with distinct colors gives the term $\tilde{m}_{\pi(S)}$. $\square$

Lemma 8 *Suppose D_i are digraphs on disjoint vertex sets V_i for $i = 1, 2$. Form the combined digraph D by connecting D_1 and D_2 with all the edges (u_1, u_2) from D_1 to D_2, each having weight 1. Then*

$$\Xi(D) = \Xi(D_1)\ \Xi(D_2).$$

Proof: This follows from (8) since a path-cycle coloring can be viewed as combining a path-cycle coloring of D_1 and a path-cycle coloring of D_2. $\square$

Theorem 3. The two definitions for $\Xi(D; \mathbf{x}, \mathbf{y})$ are equivalent.

Proof (sketch). To prove equivalence, we use induction on the number of edges of D. First, we check the base case $D = I_n$ with vertex weights $\alpha = (\alpha_1, \alpha_2, \ldots)$. Here, $\Xi(I_n) = \tilde{m}_\alpha(\mathbf{x})$, corresponding to the partition $\alpha \vdash n$. This is because each feasible coloring κ maps each block to a distinct color (i.e., number), and this gives a term in the sum

$$\sum_\kappa x_{\kappa(v_1)}^{\alpha_1} x_{\kappa(v_2)}^{\alpha_2} \cdots.$$

For a regular edge e, we have

$$\Xi(D) = \Xi(D \setminus e) + w(e)\Xi(D/e).$$

In general, the proof mimics the proof of equivalence given for $C(D)$. The proof is essentially the same except that now in D/e, the vertex weight of the new *combined* vertex has a vertex weight equal to the sum of the old vertex weights of the endpoints of the contracted edge. By induction, $\Xi(D \setminus e)$ and

$\Xi(D/e)$ are the same by either definition. The same argument applies when e is a loop. This completes the proof (sketch). $\square$

Remark. Although up to now we have only considered the case $t = 1$, the previous arguments can easily be extended to apply to more general t. Namely, we can define for any $t \in \mathbb{R}, t \neq 0$,

$$\Xi_t(D; \mathbf{x}, \mathbf{y}) = t^{w_0(D)} \Xi(D_t; \frac{\mathbf{x}}{t}, \mathbf{y}) \tag{32}$$

where the only change we make to D in forming D_t is to change the edge weights from $w(e)$ to $\frac{w(e)}{t}$.

Note that since for a partition λ,

$$\lim_{t \to 0} t^{|\lambda|} \tilde{m}_\lambda \left(\frac{\mathbf{x}}{t} \right) = p_\lambda(\mathbf{x}) \tag{33}$$

then

$$\Xi_0(D; \mathbf{x}, \mathbf{y}) = \sum_S w(S) p_{\pi(S)}(\mathbf{x}) p_{\sigma(S)}(\mathbf{y}) \tag{34}$$

is the symmetric function version of the geometric cover polynomial $\tilde{C}(D; x, y)$. In particular, for disjoint digraphs D_1 and D_2 we have the product formula

$$\Xi_0(D_1 \cup D_2; \mathbf{x}, \mathbf{y}) = \Xi_0(D_1; \mathbf{x}, \mathbf{y}) \Xi_0(D_2; \mathbf{x}, \mathbf{y}). \tag{35}$$

9 Reciprocity for $\Xi_t(D)$

We first need a few definitions.

Definition: For a symmetric function $g(\mathbf{x}, \mathbf{y})$, the notation $[g(\mathbf{x}, \mathbf{y})]_{\mathbf{x} \to (\mathbf{x}, \mathbf{y})}$ means that, treating g as a symmetric function in the x's with coefficients in the y's, the set of x variables is to be replaced by the union of the x and y variables.

Definition: The involution ω is the (standard) algebra endomorphism acting on the algebra of symmetric functions sending e_λ to h_λ (cf.[15] for definitions of e_λ and h_λ). In particular, its effect on p_λ is given by

$$\omega(p_\lambda) = sgn(\lambda)p_\lambda.$$

where we recall that $sgn(\lambda) = (-1)^{n-\#\lambda}$ where for $\lambda \vdash n$, $\#\lambda$ denotes the number of blocks of the partition λ.

The reciprocity theorem for $\Xi_t(D)$ can be stated as follows;

Theorem 4. Let D be an n-vertex digraph with edge weights $w(e)$ and vertex weights $w_0(v)$, and let D' denote the dual digraph $tJ_n - D$ with edge weights $w'(e) = t - w(e)$ and the same vertex weights $w_0(v)$. Then

$$\Xi_t(D; \mathbf{x}, \mathbf{y}) = (-1)^{\sum_v w_0(v)-n}[\omega_x \Xi_t(D', \mathbf{x}, -\mathbf{y})]_{\mathbf{x}\to(\mathbf{x},t\mathbf{y})}. \tag{36}$$

Remark. We point out that this is just the statement of the reciprocity theorem in Chow [5] except we allow arbitrary edge weights instead of 0 and 1, we include vertex weights and we have an arbitrary real value for t instead of $t = 1$. The proof in [5] used various symmetric function change of basis formulas and depended on edge weights being 0 or 1. Our proofs, on the other hand, follow our proof of reciprocity for $C_t(D)$ and are based on the deletion/contraction characterization of $\Xi_t(D)$. Of course, all these results can be interpreted as applying to an arbitrary matrix M with entries in some commutative ring R with identity.

Proof. First, we treat the case $t = 0$. In this case, we have by (34)

$$\begin{aligned}\Xi_0(D; \mathbf{x}, \mathbf{y}) &= \sum_S p_{\pi(S)}(\mathbf{x})p_{\sigma(S)}(\mathbf{y})w(S)\\ &= \sum_S p_{\pi(S)}(\mathbf{x})w(\pi(s)) \cdot p_{\sigma(S)}(\mathbf{y})w(\sigma(S))\end{aligned}$$

We now consider $\Xi_0(-D; \mathbf{x}, -\mathbf{y})$ with $D' = -D, w'(e) = -w(e)$ and $y'_i = -y_i$. Thus,

$$\Xi_0(-D; \mathbf{x}, -\mathbf{y}) = \sum_S p_{\pi(S)}(\mathbf{x})w'(\pi(s)) \cdot p_{\sigma(S)}(-\mathbf{y})w'(\sigma(S))$$

For each path-cycle cover S, we consider

$$\begin{aligned} p_{\pi(S)}(\mathbf{x})w'(\pi(S)) &= p_{\pi(S)}(\mathbf{x})w(\pi(S))(-1)^{\#\text{ of edges in }\pi(S)} \\ &= p_{\pi(S)}(\mathbf{x})w(\pi(S))(-1)^{\#\pi(S)-|\pi(S)|} \end{aligned} \tag{37}$$

and

$$p_{\pi(S)}(-\mathbf{y})w'(\sigma(S)) = p_{\sigma(S)}(\mathbf{y})(-1)^{\sigma(S)}w(\sigma(S))(-1)^{|\sigma(S)|} \tag{38}$$

Combining (37) and (38), we obtain

$$\Xi_0(-D;\mathbf{x},-\mathbf{y}) = \sum_S (-1)^{|\pi(S)|-\#\pi(S)+\sigma(S)} p_{\pi(S)}p_{\sigma(S)}w(S) \tag{39}$$

Note that $sgn(\pi(S)) = (-1)^{\pi(S)-\#\pi(S)}$. Thus, by the definition of ω_x, we have

$$\begin{aligned} \omega_x(\Xi_0(-D;\mathbf{x},-\mathbf{y})) &= \sum_S (-1)^{|\pi(S)|-\#\pi(S)+\sigma(S)}\mathrm{sgn}(\pi(S)) \\ &\quad \times p_{\pi(S)}(\mathbf{x})p_{\sigma(S)}(\mathbf{y})w(S) \\ &= \sum_S (-1)^{|\pi(S)|-\#\pi(S)+\sigma(S)}(-1)^{\pi(S)-\#\pi(S)} \\ &\quad \times\ p_{\pi(S)}(\mathbf{x})p_{\sigma(S)}(\mathbf{y})w(S) \\ &= \sum_S (-1)^{w_0(S)-|\pi(S)|}p_{\pi(S)}(\mathbf{x})p_{\sigma(S)}(\mathbf{y})w(S) \\ &= (-1)^{\sum_v w_0(v)-n}\ \Xi_0(D;\mathbf{x},\mathbf{y}). \end{aligned}$$

Thus, since $t = 0$,

$$\begin{aligned} [\omega_x\Xi_0(-D;\mathbf{x},-\mathbf{y})]_{\mathbf{x}\to(\mathbf{x},t\mathbf{y})} &= \omega_x\Xi_0(-D;\mathbf{x},-\mathbf{y}) \\ &= (-1)^{\sum_v w_0(v)-n}\ \Xi_0(D;\mathbf{x},\mathbf{y}). \end{aligned}$$

as required.

For the case $t \neq 0$, we use the fact that $\Xi_t(D;\mathbf{x},\mathbf{y}) = t^{\sum_v w_0(v)}\Xi(D_t;\frac{\mathbf{x}}{t},\mathbf{y})$ (see (32)). Consequently, it suffices to restrict our attention to the case $t = 1$. We will proceed by induction on the number of edges of D.

First, we consider the base case $D = I_n$. Thus, D has vertices $\{v_1, v_2, \ldots, v_n\}$ with weights $w_0(v_i) = \alpha_i$ and no edges. For $n = 1$, $D = I_1$ consists of a single

vertex v with weight $w_0(v) = \alpha$. Also the dual graph D' consists of the vertex v with (the same) weight $w_0'(v) = \alpha$ together with a loop e at v with edge weight $w'(e) = 1$. In this case,

$$\Xi(D; \mathbf{x}, \mathbf{y}) = \tilde{m}_\alpha(\mathbf{x}) = p_\alpha(\mathbf{x}),$$

$$\Xi(D'; \mathbf{x}, \mathbf{y}) = \tilde{m}_\alpha(\mathbf{x}) + p_\alpha(\mathbf{y}) = p_\alpha(\mathbf{x}) + p_\alpha(\mathbf{y}),$$

$$\begin{aligned}\omega_{\mathbf{x}}\Xi(D'; \mathbf{x}, -\mathbf{y})) &= (-1)^{\alpha-1}p_\alpha(\mathbf{x}) + p_\alpha(-\mathbf{y}) \\ &= (-1)^{\alpha-1}p_\alpha(\mathbf{x}) + (-1)^{\alpha}p_\alpha(\mathbf{y}),\end{aligned}$$

$$\begin{aligned}[\omega_{\mathbf{x}}\Xi(D'; \mathbf{x}, -\mathbf{y}))]_{\mathbf{x}\to(\mathbf{x},\mathbf{y})} &= (-1)^{\alpha-1}(p_\alpha(\mathbf{x}) + p_\alpha(\mathbf{y})) + (-1)^{\alpha}p_\alpha(\mathbf{y}) \\ &= (-1)^{\alpha-1}p_\alpha(\mathbf{x})\end{aligned}$$

and this case is done.

Next, we consider the case that $D = I_n$ for some $n > 1$. Thus, D consists of n independent vertices v_i with the vertex weight vector $\alpha = (\alpha_1, \alpha_2, \ldots, \alpha_n)$. Therefore,

$$\Xi(D; \mathbf{x}, \mathbf{y}) = \tilde{m}_\alpha(\mathbf{x})$$

The dual graph $D' = J_n - D$ has edges consisting of all pairs (v_i, v_j), including loops. All edges in D' have weight 1. Denote the edge $(v_i, v_1) = e_i,\ 2 \le i \le n$. We consider

$$\begin{aligned}\Xi(D'; \mathbf{x}, \mathbf{y}) &= \Xi(D' \setminus e_2) + \Xi_t(D'/e_2) \\ &= \Xi(D_2') + \Xi(D_2''),\end{aligned} \tag{40}$$

where $D_2' = D' \setminus e_2$ and $D_2'' = D'/e_2$. The (contracted) digraph D_2'' is isomorphic to J_{n-1} on the vertex set $\{v_{(1,2)}, v_3, \ldots, v_n\}$ with all edge and vertex weights of D' unchanged except that the contracted vertex $v_{(1,2)}$ replacing v_1 has weight $\alpha_1 + \alpha_2$. Continuing from (40),

$$\begin{aligned}\Xi(D'; \mathbf{x}, \mathbf{y}) &= \Xi(D_2') + \Xi(D_2'') \\ &= (\Xi(D_2' \setminus e_3) + \Xi(D_2'/e_3)) + \Xi(D_2'') \\ &= \Xi(D_3') + \Xi(D_3'') + \Xi(D_2'')\end{aligned}$$

where $D_3' = D_2' \setminus e_3$ and $D_3'' = D_2'/e_3$. The (contracted) digraph D_3'' is isomorphic to J_{n-1} on the vertex set $\{v_{(1,3)}, v_2, \ldots, v_n\}$ with all edge and vertex

weights of D' unchanged except that the contracted vertex $v_{(1,3)}$ replacing v_1 has weight $\alpha_1 + \alpha_3$.

We can continue this process until we reach

$$\begin{aligned}
\Xi(D;\mathbf{x},\mathbf{y}) &= \Xi(D_2') + \Xi(D_2'') \\
&= \Xi(D_3') + \Xi(D_3'') + \Xi(D_2'') \\
&= \ldots\ldots\ldots\ldots \\
&= \Xi(D_{n-1}' \setminus e_n) + \Xi(D_{n-1}'/e_n) + \sum_{k=2}^{n-1} \Xi(D_k'') \\
&= \Xi(D_n') + \Xi(D_n'') + \sum_{k=2}^{n-1} \Xi(D_k'') \\
&= \Xi(D_n') + \sum_{k=2}^{n} \Xi(D_k'')
\end{aligned}$$

where the (contracted) digraph D_n'' is isomorphic to J_{n-1} on the vertex set $\{v_{(1,n)}, v_2, \ldots, v_{n-1}\}$ with all edge and vertex weights of D' unchanged except that the contracted vertex $v_{(1,n)}$ replacing v_1 has weight $\alpha_1 + \alpha_n$.

Observe now that the vertex $v_1 \in D_n'$ has all edges $(v_1, v_i), 2 \leq i \leq n$, and none of the form (v_i, v_1). In other words, D_n' consists of D_0, a single vertex v_1 of weight α_1 with a loop of weight 1 connected to all vertices in D_1,(a copy of J_{n-1}) on the vertex set $\{v_2, v_3, \ldots, v_n\}$ with the original vertex and edge weights. Hence we can apply Lemma 8 to obtain:

$$\Xi(D_n') = \Xi(D_0)\Xi(D_1) \tag{41}$$

We know

$$\Xi(D_0) = \tilde{m}_{\alpha_1}(\mathbf{x}) + p_{\alpha_1}(\mathbf{y}) = p_{\alpha_1}(\mathbf{x}) + p_{\alpha_1}(\mathbf{y}). \tag{42}$$

Now consider

$$[\omega_x(\Xi(D';\mathbf{x},-\mathbf{y}))]_{\mathbf{x}\to(\mathbf{x},\mathbf{y})} = \left[\omega_x(\Xi(D_0;\mathbf{x},-\mathbf{y})) + \sum_{i=2}^{n} \omega_x(\Xi(D_i'';\mathbf{x},-\mathbf{y}))\right]_{\mathbf{x}\to(\mathbf{x},\mathbf{y})}. \tag{43}$$

By induction we have

$$[\omega_x(\Xi(D_i''; \mathbf{x}, -\mathbf{y}))]_{\mathbf{x}\to(\mathbf{x},\mathbf{y})} = \tilde{m}_{\alpha^{(i)}}(\mathbf{x})(-1)^{|\alpha^{(i)}|-n+1}$$

where $\alpha^{(i)} = (\alpha_2, \ldots, \beta_i, \ldots \alpha_n)$ and $\beta_i = \alpha_i + \alpha_1$. In particular, the sum $|\alpha^{(i)}|$ of all the entries of $\alpha^{(i)}$ is just $|\alpha|$, the sum of all the original vertex weights. Now by (41), (42) and induction, we have

$$\begin{aligned}
[\omega_x(\Xi(D_n'; \mathbf{x}, -\mathbf{y}))]_{\mathbf{x}\to(\mathbf{x},\mathbf{y})} &= \big[\omega_x\big(\Xi(D_0)\Xi(D_1; \mathbf{x}, -\mathbf{y})\big)\big]_{\mathbf{x}\to(\mathbf{x},\mathbf{y})} \\
&= (-1)^{|\overline{\alpha}|-n+1}\tilde{m}_{\overline{\alpha}}(\mathbf{x})[\omega_x\big(\Xi(D_1; \mathbf{x}, -\mathbf{y}\big)]_{\mathbf{x}\to(\mathbf{x},\mathbf{y})} \\
&= (-1)^{|\overline{\alpha}|-n+1}\tilde{m}_{\overline{\alpha}}(\mathbf{x})[\omega_x\big(p_{\alpha_1}(\mathbf{x}) + p_{\alpha_1}(-\mathbf{y})\big)]_{\mathbf{x}\to(\mathbf{x},\mathbf{y})} \\
&= (-1)^{|\overline{\alpha}|-n+1}\tilde{m}_{\overline{\alpha}}(\mathbf{x})[(-1)^{\alpha_1-1}p_{\alpha_1}(\mathbf{x}) + p_{\alpha_1}(-\mathbf{y})]_{\mathbf{x}\to(\mathbf{x},\mathbf{y})} \\
&= (-1)^{|\overline{\alpha}|-n+1}\tilde{m}_{\overline{\alpha}}(\mathbf{x})\Big((-1)^{\alpha_1-1}\big(p_{\alpha_1}(\mathbf{x}) + p_{\alpha_1}(\mathbf{y})\big) + p_{\alpha_1}(-\mathbf{y})\Big) \\
&= (-1)^{|\alpha|-n}\tilde{m}_{\bar{\alpha}}(\mathbf{x})p_{\alpha_1}(\mathbf{x})
\end{aligned}$$

where $\overline{\alpha} = (\alpha_2, \alpha_3, \ldots, \alpha_n)$.

Now substituting into (43), we get

$$\begin{aligned}
[\omega_{\mathbf{x}}(\Xi(D'; \mathbf{x}, -\mathbf{y}))]_{\mathbf{x}\to(\mathbf{x},\mathbf{y})} &= \tilde{m}_{\bar{\alpha}}(\mathbf{x})(-1)^{|\alpha|-n}p_{\alpha_1(\mathbf{x})} + \sum_{i=2}^{n}\tilde{m}_{\alpha^{(i)}}(\mathbf{x})(-1)^{|\alpha|-n+1} \\
&= (-1)^{|\alpha|-n}\left(\tilde{m}_{\bar{\alpha}}(\mathbf{x})p_{\alpha_1(\mathbf{x})} - \sum_{i=2}^{n}\tilde{m}_{\alpha^{(i)}}(\mathbf{x})\right) \\
&\stackrel{?}{=} (-1)^{|\alpha|-n}\tilde{m}_{\alpha}(\mathbf{x}). \qquad (44)
\end{aligned}$$

To prove (44), consider

$$\tilde{m}_{\bar{\alpha}}(\mathbf{x})p_{\alpha_1(\mathbf{x})} = \tilde{m}_{\bar{\alpha}}(\mathbf{x})\sum_i x_i^{\alpha_1}.$$

By Lemma 8, we have

$$\tilde{m}_{\bar{\alpha}}(\mathbf{x})p_{\alpha_1(\mathbf{x})} = \left(\sum_{\kappa}\prod_{i=2}^{n} x_{\kappa(v_i)}^{\alpha_i}\right)\sum_i x_i^{\alpha_1}$$

where κ ranges over all feasible colorings of I_{n-1} on $\{v_2, \ldots, v_n\}$ so that distinct vertices have different colors. We consider

$$\begin{aligned}\left(\sum_{\kappa}\prod_{i=2}^{n} x_{\kappa(v_i)}^{\alpha_i}\right)\sum_{j} x_j^{\alpha_1} &= \sum_{\kappa}\left(\prod_{i=2}^{n} x_{\kappa(v_i)}^{\alpha_i}\Big(\sum_{j\neq\kappa(v_i)\forall i} x_j^{\alpha_1} + \sum_{j=2}^{n} x_{\kappa(v_j)}^{\alpha_1}\Big)\right)\\ &= \sum_{\kappa'}\prod_{i=1}^{n} x_{\kappa'(v_i)}^{\alpha_i} + \sum_{\kappa}\left(\prod_{i=2}^{n} x_{\kappa(v_i)}^{\alpha_i}\Big(\sum_{j=2}^{n} x_{\kappa(v_j)}^{\alpha_1}\Big)\right)\\ &= \tilde{m}_{\alpha}(\mathbf{x}) + \sum_{\kappa}\left(\prod_{i=2}^{n} x_{\kappa(v_i)}^{\alpha_i}\Big(\sum_{j=2}^{n} x_{\kappa(v_j)}^{\alpha_1}\Big)\right)\end{aligned}$$

since each κ can be extended to a feasible coloring κ' of I_n on $\{v_1, v_2, \ldots, v_n\}$ by choosing a value for $\kappa(v_1)$ which is different from the values $\kappa(v_i)$. Thus,

$$\begin{aligned}\tilde{m}_{\bar{\alpha}}(\mathbf{x})p_{\alpha_1(\mathbf{x})} &= \tilde{m}_{\alpha}(\mathbf{x}) + \sum_{\kappa}\left(\prod_{i=2}^{n} x_{\kappa(v_i)}^{\alpha_i}\Big(\sum_{j=2}^{n} x_{\kappa(v_j)}^{\alpha_1}\Big)\right)\\ &= \tilde{m}_{\alpha}(\mathbf{x}) + \sum_{j=2}^{n}\sum_{\kappa}\left(x_{\kappa(v_j)}^{\alpha_1}\prod_{i=2}^{n} x_{\kappa(v_i)}^{\alpha_i}\right)\end{aligned}$$

We note that for each j,

$$\sum_{\kappa} x_{\kappa(v_j)}^{\alpha_1}\prod_{i=2}^{n} x_{\kappa(v_i)}^{\alpha_i} = \tilde{m}_{\alpha^{(j)}}(\mathbf{x}).$$

where $\alpha^{(j)}$ denotes the vertex weight vector with $\alpha^{(j)}(v_i) = \alpha(v_i)$ for $i = 2, \ldots, n$ except that $\alpha^{(j)}(v_j) = \alpha(v_1) + \alpha(v_j)$. Therefore we have

$$\tilde{m}_{\bar{\alpha}}(\mathbf{x})p_{\alpha_1(\mathbf{x})} = \tilde{m}_{\alpha}(\mathbf{x}) + \sum_{j=2}^{n}\tilde{m}_{\alpha^{(j)}}(\mathbf{x}).$$

This proves (44) and the proof for the base case $D = I_n$ is complete.

For the general case, suppose that D has an edge e.

Case 1. e is a regular edge.

Suppose that all digraphs with fewer edges satisfy the reciprocity theorem (36). Then, by induction,

$$\begin{aligned}\Xi(D;\mathbf{x},\mathbf{y}) &= \Xi(D\setminus e;\mathbf{x},\mathbf{y}) + w(e)\Xi(D/e;\mathbf{x},\mathbf{y})\\ &= (-1)^{w_0(D)-n}[\omega_x\Xi(J_n-(D\setminus e)),\mathbf{x},-\mathbf{y})]_{\mathbf{x}\to(\mathbf{x},\mathbf{y})}\\ &\times\quad (-1)^{w_0(D)-n+1}w(e)[\omega_x\Xi(J_n-(D/e)),\mathbf{x},-\mathbf{y})]_{\mathbf{x}\to(\mathbf{x},\mathbf{y})}\end{aligned} \tag{45}$$

Set $F = J_n \setminus (G \setminus e)$. Clearly, $e \in F$ with weight 1. Following the proof of (21), we have

$$F/e = J_{n-1} - (G/e)$$

and the vertex weights in F/e are the same as in G/e. The loop at the new vertex vu in F/e (coming from contracting the edge $e' = (v,u)$) has weight $1 - w(e')$. Thus, (45) can be rewritten as

$$\begin{aligned}\Xi(D;\mathbf{x},\mathbf{y}) &= (-1)^{w_0(D)-n}[\omega_x\Xi(F;\mathbf{x},-\mathbf{y})]_{\mathbf{x}\to(\mathbf{x},\mathbf{y})}\\ &\times\quad (-1)^{w_0(D)-n+1}w(e)[\omega_x\Xi(F/e;\mathbf{x},-\mathbf{y})]_{\mathbf{x}\to(\mathbf{x},\mathbf{y})}\end{aligned} \tag{46}$$

We now use the following fact (the proof follows the same method as that of Lemma 1):

$$\Xi(F) = \Xi(F - w(e)e) + w(e)\Xi(F/e). \tag{47}$$

Then we obtain

$$\Xi(D;\mathbf{x},\mathbf{y}) = (-1)^{w_0(D)-n}[\omega_x\Xi(F';\mathbf{x},-\mathbf{y})]_{\mathbf{x}\to(\mathbf{x},\mathbf{y})} \tag{48}$$

where

$$F' = F - w(e)e = (J_n - (D\setminus e)) \setminus w(e)e = J_n - D. \tag{49}$$

This takes care of this case.

Case 2 Suppose the only edges of D are loops.
Let e be a loop in D at the vertex v with edge weight $w(e)$ and vertex weight $w_0(v)$. Then, by induction,

$$\begin{aligned}\Xi(D;\mathbf{x},\mathbf{y}) &= \Xi(D\setminus e;\mathbf{x},\mathbf{y}) + w(e)p_{\alpha_{w_0(v)}}(\mathbf{y})\Xi(D/e;\mathbf{x},\mathbf{y})\\ &= (-1)^{w_0(D)-n}[\omega_x\Xi(J_n-(D\setminus e);\mathbf{x},-\mathbf{y})]_{\mathbf{x}\to(\mathbf{x},\mathbf{y})}\\ &+ (-1)^{\sum_{u\neq v} w_0(u)-n+1}w(e)p_{\alpha_{w_0(v)}}(\mathbf{y})[\omega_x\Xi(J_n-(D/v);\mathbf{x},-\mathbf{y})]_{\mathbf{x}\to(\mathbf{x},\mathbf{y})}\end{aligned} \tag{50}$$

Set $F = J_n - (D \setminus e)$. As before, it is easy to see that

$$F \setminus v = J_{n-1} - (G \setminus v).$$

Hence, (50) can be rewritten as

$$\begin{aligned}\Xi(D;\mathbf{x},\mathbf{y}) &= (-1)^{w_0(D)-n}[\omega_x \Xi(F;\mathbf{x},-\mathbf{y})]_{\mathbf{x}\to(\mathbf{x},\mathbf{y})} \\ &\times \quad (-1)^{\sum_{u\neq v} w_0(u)-n+1} w(e) p_{\alpha_{w_0(v)}}(\mathbf{y})[\omega_x \Xi(F\setminus v;\mathbf{x},-\mathbf{y})]_{\mathbf{x}\to(\mathbf{x},\mathbf{y})}\end{aligned} \tag{51}$$

We now use the fact that

$$F \setminus w(e)e = (J_n - (D\setminus e)) - w(e)e = J_n - D$$

Therefore we have (finally!)

$$\begin{aligned}\Xi(D;\mathbf{x},\mathbf{y}) &= (-1)^{\sum_v w_0(v)-n}[\omega_x \left(\Xi(F\setminus w(e)e;\mathbf{x},-\mathbf{y}) + w(e)p_{\alpha_{w_0(v)}}(-\mathbf{y})\Xi(F\setminus v;\mathbf{x},\mathbf{y})\right)]_{\mathbf{x}\to(\mathbf{x},\mathbf{y})} \\ &+ (-1)^{\sum_{u\neq v} w_0(u)-n+1} w(e)p_{\alpha_{w_0(v)}}(\mathbf{y})[\omega_x \Xi(F\setminus v;\mathbf{x},-\mathbf{y})]_{\mathbf{x}\to(\mathbf{x},\mathbf{y})} \\ &= (-1)^{\sum_v w_0(v)-n}[\omega_x \Xi(F\setminus w(e)e;\mathbf{x},\mathbf{y})]_{\mathbf{x}\to(\mathbf{x},\mathbf{y})} \\ &= (-1)^{w_0(D)-n}[\omega_x \Xi(J_n - D;\mathbf{x},\mathbf{y})]_{\mathbf{x}\to(\mathbf{x},\mathbf{y})}\end{aligned}$$

as required. This completes the proof of Theorem 4 when $t = 1$.

To finish the proof of Theorem 4, we now need to consider the case of general $t \neq 0, 1$. We will repeatedly use the definition of Ξ_t and use the preceding results for $t = 1$. We consider

$$\begin{aligned}\Xi(D;\mathbf{x},\mathbf{y}) &= t^{w_0(D)}\Xi(D_t;\frac{\mathbf{x}}{t},\mathbf{y}) && \text{(by the definition of } \Xi_t) \\ &= (-1)^{w_0(D)-n} t^{w_0(D)}[\omega_x \Xi(J_n - D_t;\frac{\mathbf{x}}{t},-\mathbf{y})]_{\frac{\mathbf{x}}{t}\to(\frac{\mathbf{x}}{t},\mathbf{y})} \\ & && \text{(using the case of } t=1) \\ &= (-1)^{w_0(D)-n}[\omega_x t^{w_0(D)}\Xi(J_n - D_t;\frac{\mathbf{x}}{t},-\mathbf{y})]_{\frac{\mathbf{x}}{t}\to(\frac{\mathbf{x}}{t},\mathbf{y})} \\ & && \text{(by the definition of } \Xi_t) \\ &= (-1)^{w_0(D)-n}[\omega_x \Xi_t(tJ_n - D;\mathbf{x},-\mathbf{y})]_{\mathbf{x}\to(\mathbf{x},t\mathbf{y})}.\end{aligned}$$

Thus, Theorem 4 is proved. □

To show that Theorem 4 implies Theorem 2, we first consider the case that $t = 1$. Thus, it suffices to show that for positive integers i and j,

$$C_t(D; i, j) = (-1)^n C_t(D'; -i - tj, j)$$

follows from (36), where $D' = tJ_n - D$. To do this, we first consider the case of $t = 1$. We define

$$Z(H; \mathbf{x}, \mathbf{y}) \stackrel{\text{def}}{=} \left[\omega_{\mathbf{x}} \Xi(H; \mathbf{x}, \mathbf{y})\right]_{\mathbf{x} \to (\mathbf{x}, \mathbf{y})}.$$

From Theorem 4, we have

$$\Xi_t(D; \mathbf{x}, \mathbf{y}) = (-1)^{w_0(D) - n} Z(H; \mathbf{x}, \mathbf{y}).$$

It suffices to show that for any doubly-weighted digraph H,

$$Z(H; 1^i, 1^j) = (-1)^{w_0(D)} C(H; -i - j, j).$$

To do this, we follow the strategy in [5] and consider $\omega_x \tilde{m}_\pi(\mathbf{x})$. From [9] (Theorem 2, p. 381), we know

$$\tilde{m}_\pi(\mathbf{x}) = \sum_{\sigma \geq \pi} \mu(\pi, \sigma) p_\sigma(\mathbf{x})$$

where $\mu(\pi, \sigma)$, the Möbius function for the partition lattice partially-ordered by refinement, is given by

$$\mu(\pi, \sigma) = sgn(\pi) sgn(\sigma) \prod_i i!^{r_i}$$

where π is a refinement of σ, and r_i denotes the number of blocks of σ that are composed of i blocks of π. We also know from [9] that

$$\begin{aligned} f_\pi(\mathbf{x}) &\stackrel{\text{def}}{=} sgn(\pi) \omega_{\mathbf{x}} \tilde{m}_\pi(\mathbf{x}) \\ &= \sum_{\sigma \geq \pi} |\mu(\pi, \sigma)| p_\sigma(\mathbf{x}) \end{aligned}$$

and consequently (e.g., see [5])

$$\begin{aligned} f_\pi(1^k) &= \sum_{\sigma \geq \pi} |\mu(\pi, \sigma)| k^{\#\sigma} \\ &= k^{\overline{\#\pi}} = (-1)^{\#\pi} (-k)^{\underline{\#\pi}}. \end{aligned}$$

Also,

$$p_\sigma(-\mathbf{x}) = (-1)^{|\sigma|} p_\sigma(\mathbf{x})$$

Thus,

$$\begin{aligned}
Z(H;\mathbf{x},\mathbf{y}) &= [\omega_x \Xi(H;\mathbf{x},-\mathbf{y})]_{\mathbf{x}\to(\mathbf{x},\mathbf{y})} \\
&= \left[\omega_x \sum_S \tilde{m}_{\pi(S)}(\mathbf{x}) p_{\sigma(S)}(-\mathbf{y}) w'(S)\right]_{\mathbf{x}\to(\mathbf{x},\mathbf{y})} \\
&= \sum_S sgn(\pi(S)) f_{\pi(S)}(\mathbf{x},\mathbf{y})(-1)^{|\sigma(S)|} p_{\sigma(S)}(\mathbf{y}) w'(S).
\end{aligned}$$

where S ranges over all path-cycle covers of H, and $w'(S)$ denotes a product of the edge weights in H. Therefore, replacing $\mathbf{x}$ by 1^i and $\mathbf{y}$ by 1^j, we get

$$\begin{aligned}
Z(H;1^i,1^j) &= \sum_S sgn(\pi(S)) f_{\pi(S)}(1^{i+j})(-1)^{|\sigma(S)|} p_{\sigma(S)}(1^j) w'(S) \\
&= \sum_S (-1)^{|\pi(S)|-\#\pi(S)}(-1)^{\#\pi(S)}(-i-j)^{\underline{\pi(S)}}(-1)^{|\sigma(S)|} j^{\#\sigma(S)} w'(S) \\
&= \sum_S (-1)^{|\pi(S)|+|\sigma(S)|}(-i-j)^{\underline{\#\pi(S)}} j^{\#\sigma(S)} w'(S) \\
&= (-1)^{w_0(D)} \sum_S (-i-j)^{\underline{\#\pi(S)}} j^{\#\sigma(S)} w'(S) \\
&= (-1)^{w_0(D)} C(H;-i-j,j)
\end{aligned}$$

as claimed. Therefore we have proved that

$$C(D;i,j) = (-1)^n C(D';-i-j,j) \tag{52}$$

To show that Theorem 4 implies Theorem 2 for general $t \neq 0$, we use Lemma 3.

$$\begin{aligned}
C_t(D;i,j) &= t^n C(D_t, x/t, y) \\
&= t^n (-1)^n C(J_n - D_t, -x/t - y, y) \qquad \text{(by using (52))} \\
&= (-1)^n C_t(tJ_n - D; -i-tj, j)
\end{aligned}$$

as desired. The case $t = 0$ follows by applying (33).

10 Concluding remarks.

As noted earlier, although our original motivation was the study of digraphs, our results actually apply to arbitrary (square) matrices M with entries in some commutative ring with identity. It would be interesting to expand Ξ_t using different bases for the symmetric (or quasi-symmetric) functions to see what combinatorial interpretations the corresponding coefficients might have (cf.[6]). Previous work connected properties of the original cover polynomial to the theory of rook polynomials, G-descents in graphs (see [7] and also [6]) and the theory of P-partitions. No doubt the generalized polynomial $C_t(D)$ has corresponding connections but we have not explored these yet.

In [5], Chow makes the following tantalizing observation. Suppose we define

$$\hat{\Xi}(D;\mathbf{x},\mathbf{y}) = \sum_S (-2)^{\#\sigma(S)} \tilde{m}_{\pi(S)}(\mathbf{x},\mathbf{y}) p_{\sigma(S)}(\mathbf{y})$$

where the sum is over all path-cycle covers S of a digraph D. Then

$$\hat{\Xi}(D;\mathbf{x},\mathbf{y}) = \omega_x \hat{\Xi}(D;\mathbf{x},-\mathbf{y}).$$

He suggests that $\hat{\Xi}(D;\mathbf{x},\mathbf{y})$ could be studied in the same way that $\Xi(D;\mathbf{x},\mathbf{y})$ was. It is certainly reasonable to conjecture that new and interesting properties hold for $\hat{\Xi}(D;\mathbf{x},\mathbf{y})$ as well as for the analogous generalized function $\hat{\Xi}_t(D;\mathbf{x},\mathbf{y})$! Clearly much remains to be done.

References

[1] M. Bläser and R. Curticapean, The complexity of the cover polynomials for planar graphs of bounded degree, *Mathematical Foundations of Computer Science 2011*, Lecture Notes in Computer Science **6907** Springer, Heidelberg, (2011), 96–107.

[2] M. Bläser and H. Dell, Complexity of the Cover Polynomial, *Automata, Languages and Programming*, Lecture Notes in Computer Science **4596**, (2007), 801–812.

[3] M. Bläser, H. Dell and M. Fouz, Complexity and Approximability of the Cover Polynomial, *Computational Complexity*, **21**, (2012), 359–419.

[4] O. d'Antona and E. Munarini, The Cycle-Path Indicator Polynomial of a Digraph, *Adv. Appl. Math* **25**, (2000), 41–56.

[5] T. Y. Chow, The Path-Cycle Symmetric Function of a Digraph, *Adv. in Math.*, **118** (1996), 71–98.

[6] T. Y. Chow, Descents, Quasi-symmetric Functions, Robinson-Shensted for Posets, and the Chromatic Symmetric Function, *J. Algebraic Combinatorics* **10** (1999), 227–240.

[7] F. R. K. Chung and R. L. Graham, On the Cover Polynomial of a Digraph, *Jour. Combinatorial Th.* (B) **65** (1995), 273–290.

[8] R. Diestel, *Graph Theory*, Graduate Texts in Mathematics, **173**, Springer-Verlag, Heidelberg, 4th ed., 2010, xvii+437 pp.

[9] P. Doubilet, On the foundations of combinatorial theory, **VII**, Symmetric functions through the theory of distribution and occupant, *Studies Appl. Math*, **51** (1972), 377–396.

[10] I. Gessel, (personal communcation)

[11] F. Jaeger, D. L. Vertigan and D. J. A. Welsh, On the computational complexity of the Jones and Tutte polynomials, *Math. Proc. Cambridge Philos. Soc.* **j108**, (1990), 35–53.

[12] J. G. Oxley and D. J. A. Welsh, Tutte polynomials computable in polynomial time, *Random Structures and Algorithms*, **109** (1992), 185–192.

[13] R. P. Stanley, A Symmetric Function Generalization of the Chromatic Polynomial of a Graph, *Adv. in Math.*, **111** (1995), 166–194.

[14] R. P. Stanley, Graph colorings and related symmetric functions: Ideas and Applications. *Discrete Mathematics* **193** (1998), 267–286.

[15] R. P. Stanley, Enumerative Combinatorics. Vol 2, *Cambridge Studies in Advanced Mathematics*, **62** Cambridge Univ. Press, Cambridge, 1999, xii+581 pp.

[16] D. J. A. Welsh, *Knots, Colourings and Counting,* London Mathematical Society Lecture Notes Series **186**, Cambridge Univ. Press, 1993.

[17] D. J. A. Welsh, The Tutte polynomial, *Random Structures and Algorithms*, **15**, (1999), 210–228.